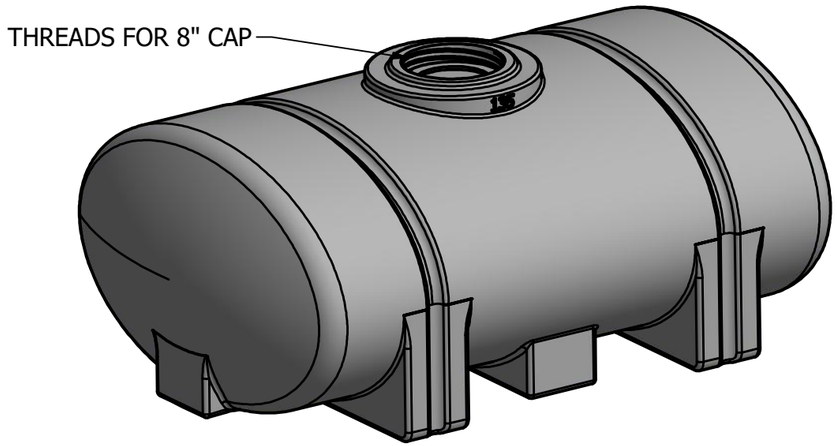

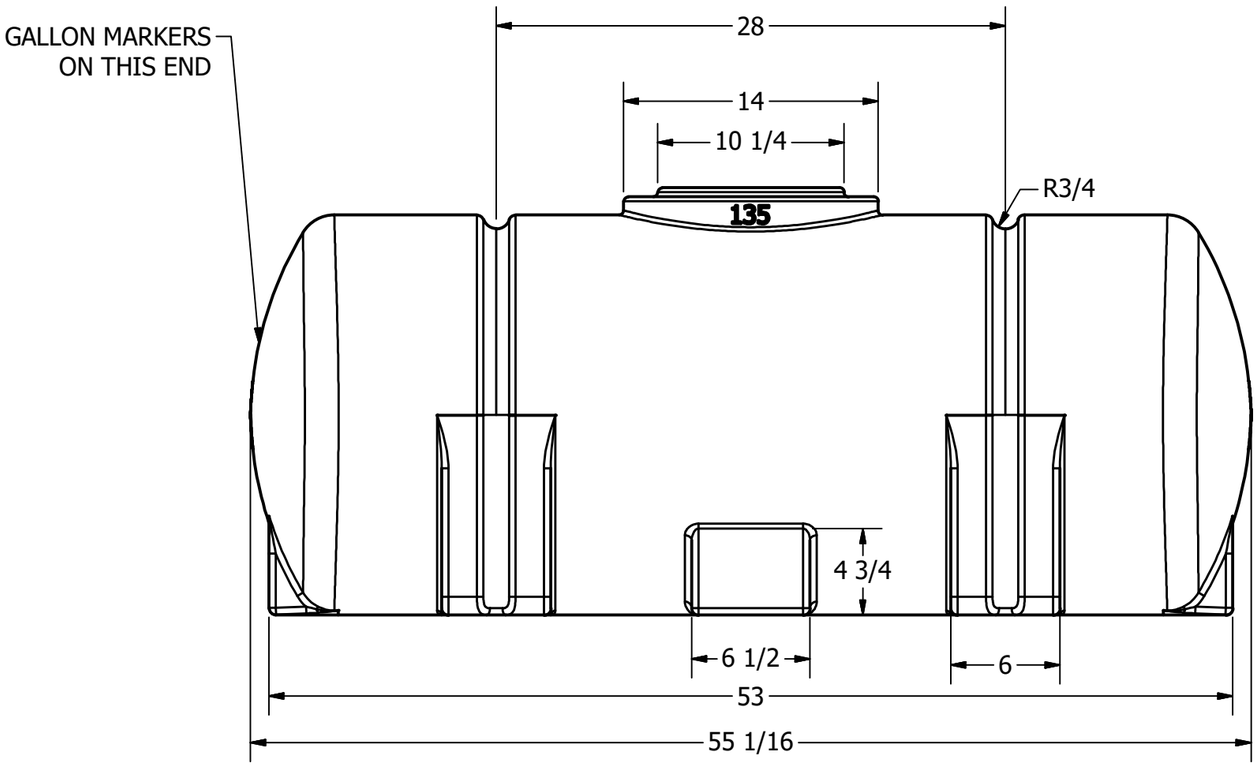

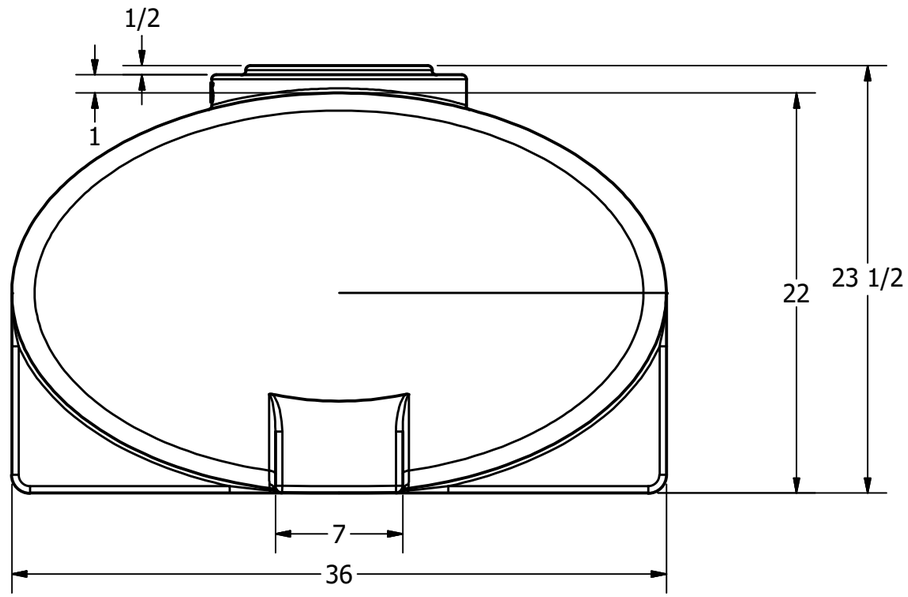

DRAWN Liv Oltean	7-15-2016	MAS PRECISION PLASTICS Real Service. Real Solutions.
CHECKED		TITLE: 135 GALLON ELLIPTICAL LEG TANK
QA		
MFG		
APPROVED		

SIZE		DWG NO	REV
B			A

SCALE: 1/16 — SHEET 1 OF 1