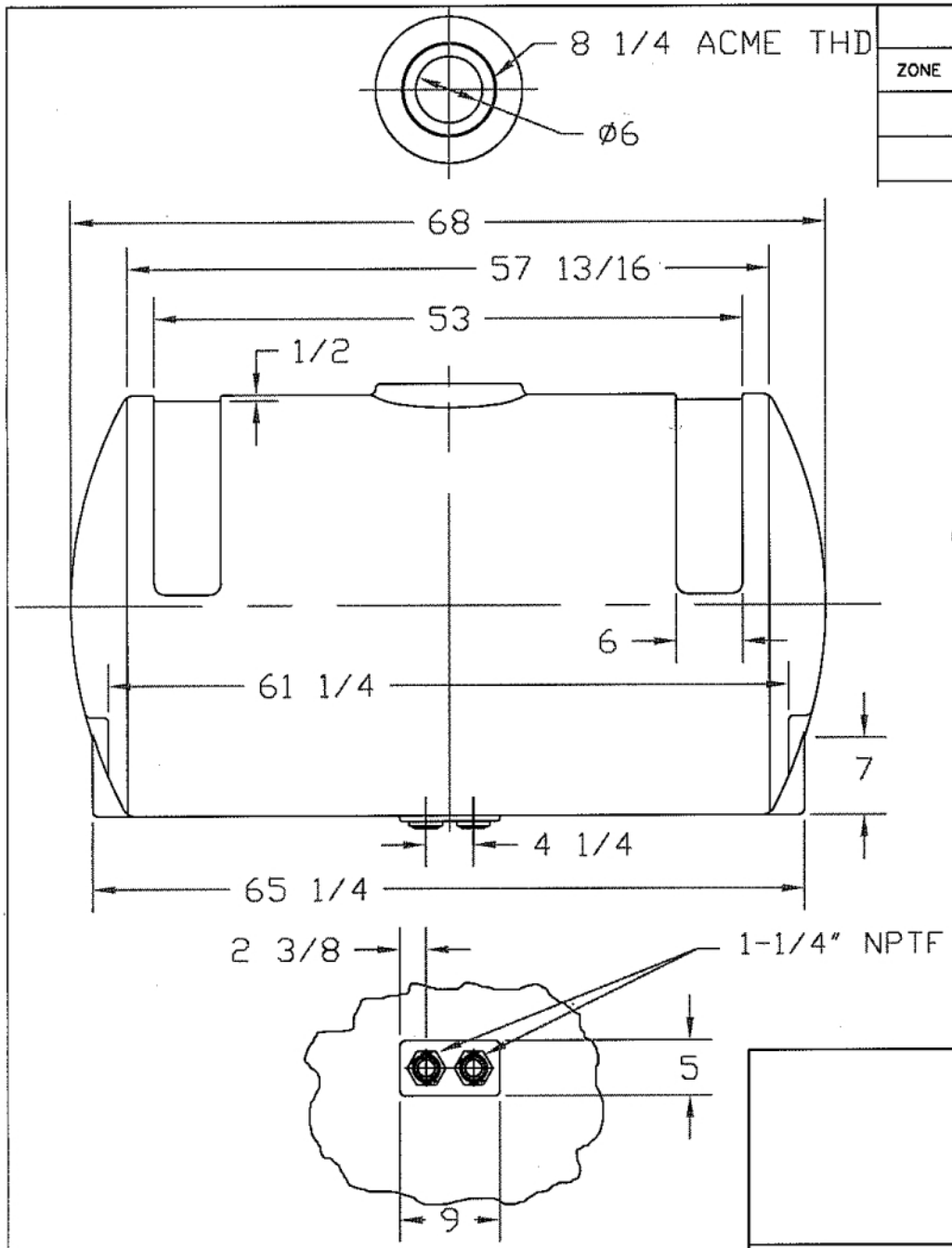

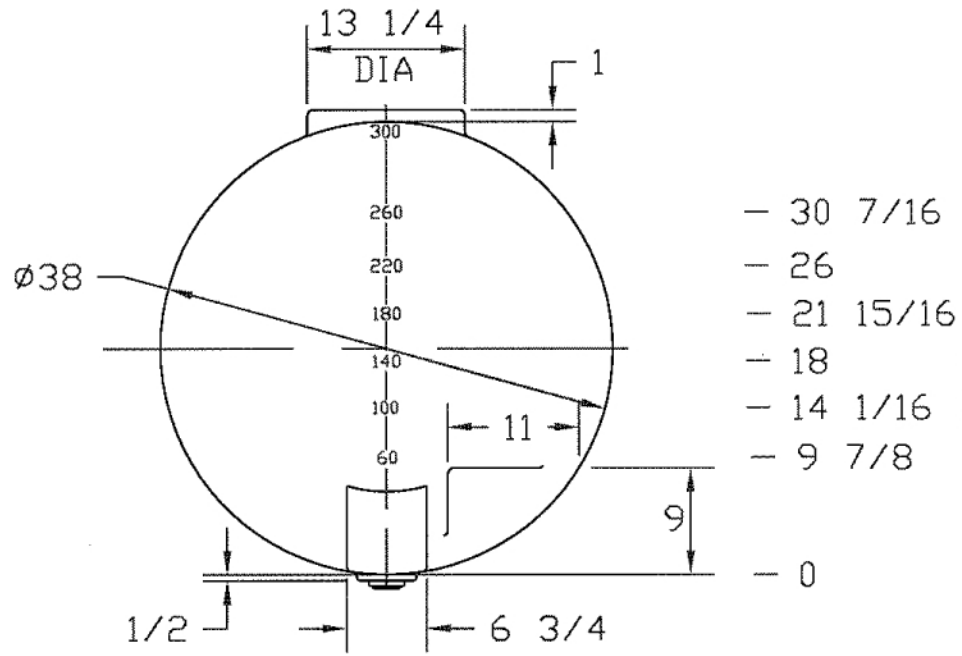

REVISIONS

ZONE	REV	DESCRIPTION	DATE	APPROVED
	C	REDRAWN	20AUG97	
	D	FITTINGS UPDATED	09DEC02	

MAS PRECISION PLASTICS
Real Service. Real Solutions.

300 GALLON APPLICATOR TANK

JTP 20AUG97

SIZE	FSCM NO.	DWG NO.	REV
A			D

SCALE 1/16 SHEET